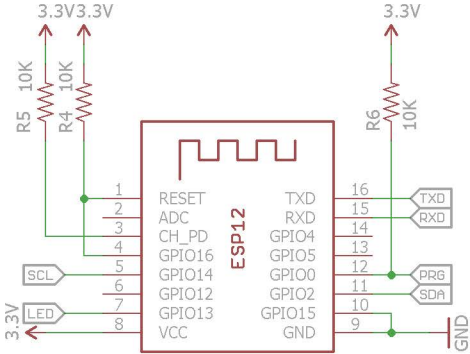
3.3V
3.3V
3.3V
R5
10K
R4
10K
R6
10K
ESP12
RESET
ADC
CH_PD
GPIO16
GPIO14
GPIO12
GPIO13
VCC
TXD
RXD
GPIO4
GPIO5
GPIO0
GPIO2
GPIO15
GND
SCL
LED
3.3V
TXD
RXD
PRG
SDA
GND

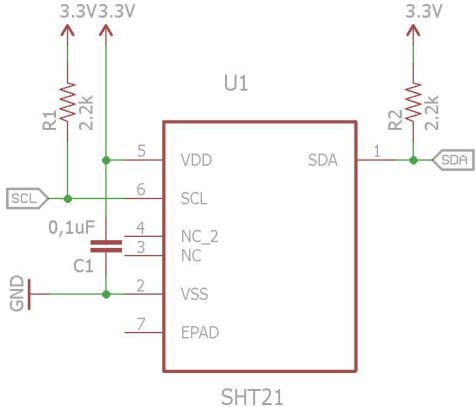
3.3V
3.3V
3.3V
U1
R1
2.2k
R2
2.2k
VDD
SCL
NC_2
NC
VSS
EPAD
SDA
SCL
0,1uF
C1
GND
SDA
SHT21

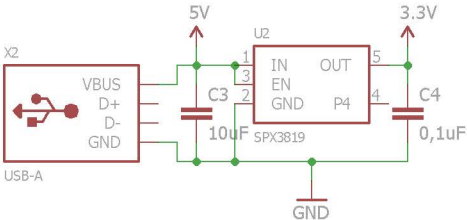
5V
3.3V
X2
VBUS
D+
D-
GND
USB-A
C3
10uF
U2
IN
EN
GND
OUT
P4
SPX3819
C4
0,1uF
GND

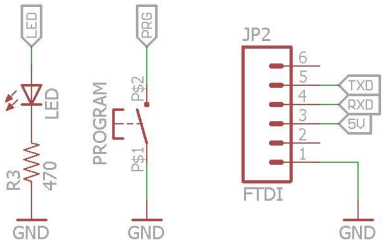
LED
LED
R3
470
GND
PROGRAM
PRG
P$2
P$1
GND
JP2
TXD
RXD
5V
FTDI
GND